注: 未经允许禁止传输、复制、编辑该文档，以及利用其内容进行交流

REV	E.C.N NO.	CONTENT	CHK	DATE

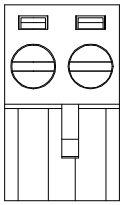

2P

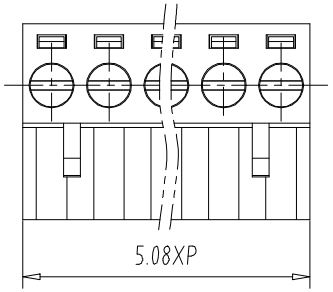

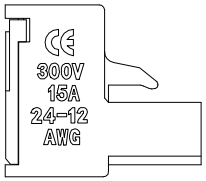

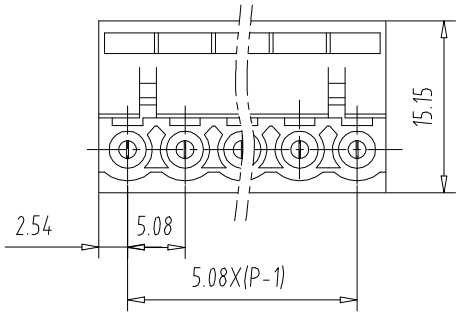

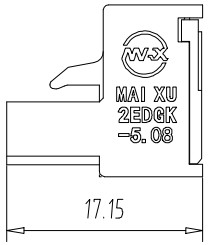

NOTES1:

UL Standard

1.Rating voltage/current: 300V/15A
2.withstanding voltage: AC2000V/1Min
3.Torque value: M2.5, 3.54Lb.in
4.Wire range: 24～12AWG

IEC Standard

1.

Pollution Degree	2
Overvoltage Category	Ⅲ
Rate Impulse Voltage(KV)	4.0KV
Rate Voltage(V)	320V
Rate Current(A)	15A

2. Torque value: M2.5, 0.4Nm
3.wire range: 1.0～2.5mm²

NOTES2:

1.Housing: PA66 (UL94V-0)
2.Cover: PA66 (UL94V-0)
3.Cage: Brass (Ni Plated)
4.Clamp: Phosphor Brons (Ni Plated)
5.Screw: Steel (M2.5,Zn Plated)

NOTES3:

1.Pitch: 5.08mm Poles: 02-24P
2.Stripping length: 7-8mm
3.Operating temperature: -40℃～+105℃
4.RoHS Compliance

How to order

MX2EDGK - 5.08 - XXXX - XXP - X - X - X

产品型号

间距

颜色:
灰色:GY 橙色:OE
蓝色:BU 红色:RD
黑色:BK 透明色:TT
绿色:GN 黄色:YW
透明色:TT 白色:WE

01:常规颜色
02-99:
定制颜色

极数

CU:铜方块
FE:铁方块

0:Y一字螺丝
1:S十字螺丝
2:PS平头十字螺丝

A-Z其他定制

Pitch Range In mm			Nominal Dimension Range In mm					— ⌒ ▱
TO 6	Over 6 TO 10	Over 10 TO 24	TO 30	Over 30 TO 60	Over 60 TO 100	Over 100 TO 150	Over 150	0.1/10
								∠
±0.15	±0.20	±0.30	±0.30	±0.50	±0.70	±1.00	±1.30	±2°

ITEM	NAME OF PART		NO. OF PART	Q"TY	MATERIAL		NOTE
DWG.	CKK	DATE	22.09.14	UNITS	MM	SHEET/OF	1/1
CHK.		DATE		SCALE	1:1	A4	
APP.		DATE		NAME	MX2EDGK-5.08-XXP		
MAI XU	CIXI MAIXU ELECTRONICS CO.,LTD. 慈溪迈旭电子有限公司			DWGNO.			